268 .05

Craftsmans—Corner

Edited by Chuck Larsen, Designee Director

HOLE SAW FOR INSTRUMENT MOUNTING

From Tom Henegry (EAA 1217)
President, EAA Chapter 723
1172 Milligan Drive
Camarillo, CA 93010

and

Ken Clunis (EAA 129578)
Treasurer, EAA Chapter 723
2040 N. Fayton Court
Camarillo, CA 93010

Locating a saw for drilling the 3.12" diameter holes necessary for mounting aircraft instruments can be time consuming, expensive and sometimes nearly impossible. Chapter 723 member Ken Clunis devised this smooth turning hole saw to cut the instrument holes in his LongEZ. The photo and drawing by Tom Henebry tell the story of how to make this neat tool. The dimensions can, of course, be changed for other sized holes. The blade is a segment of band saw blade appropriate for the material to be cut. The set of the saw teeth provides the correct clearance.

This hole saw can be used in a hand drill but it is much more accurate if a drill press is used. A pilot or centering hole for the steel guide pin should first be drilled in the material. The hole saw is then used to cut part way through the material and completed by cutting from the opposite side. This procedure assures a smooth, accurate hole for your instrument mount.

(Photo by Tom Henebry)

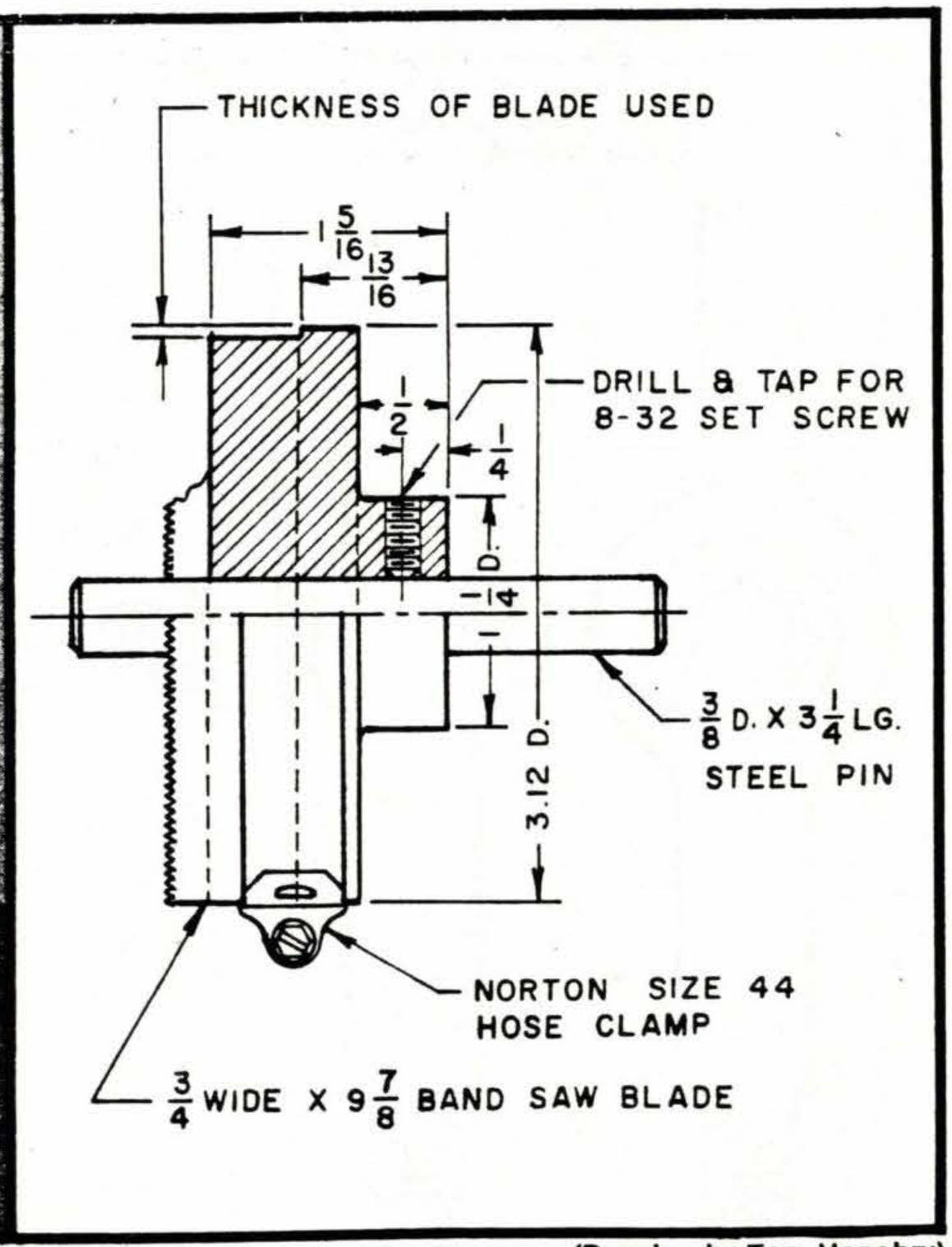

(Drawing by Tom Henebry)

Craftsmans—Corner

Edited by Chuck Larsen, Designee Director

HOLE SAW FOR INSTRUMENT MOUNTING

From Tom Henegry (EAA 1217)
President, EAA Chapter 723
1172 Milligan Drive
Camarillo, CA 93010

and

Ken Clunis (EAA 129578)
Treasurer, EAA Chapter 723
2040 N. Fayton Court
Camarillo, CA 93010

Locating a saw for drilling the 3.12" diameter holes necessary for mounting aircraft instruments can be time consuming, expensive and sometimes nearly impossible. Chapter 723 member Ken Clunis devised this smooth turning hole saw to cut the instrument holes in his LongEZ. The photo and drawing by Tom Henebry tell the story of how to make this neat tool. The dimensions can, of course, be changed for other sized holes. The blade is a segment of band saw blade appropriate for the material to be cut. The set of the saw teeth provides the correct clearance.

This hole saw can be used in a hand drill but it is much more accurate if a drill press is used. A pilot or centering hole for the steel guide pin should first be drilled in the material. The hole saw is then used to cut part way through the material and completed by cutting from the opposite side. This procedure assures a smooth, accurate hole for your instrument mount.

(Photo by Tom Henebry)

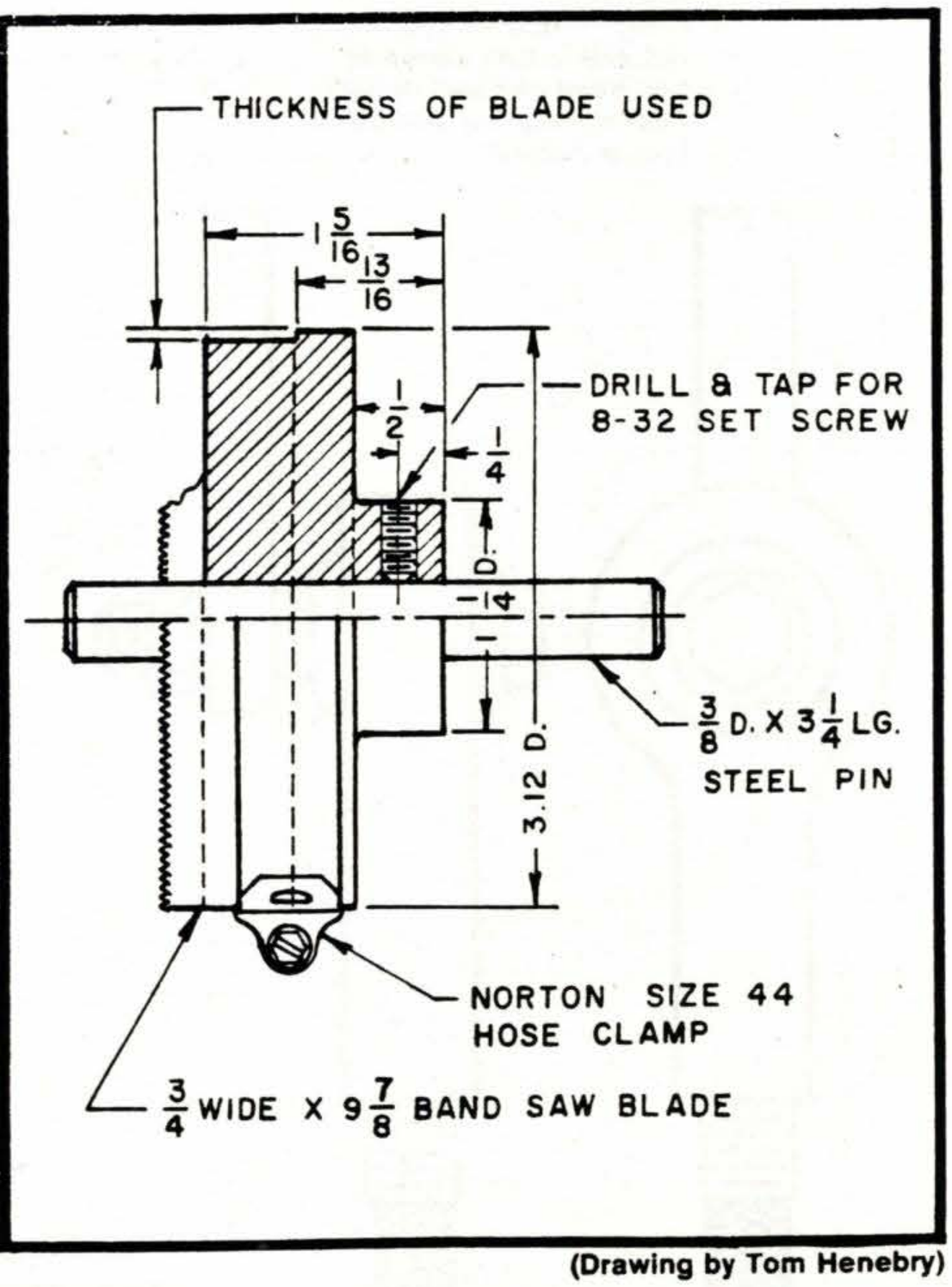

(Drawing by Tom Henebry)

Tony Bingelis

A LOOK AT SOME WIRING PRACTICES

Wiring a homebuilt, obviously, is not an exact science - but there are proven guidelines we can follow with assurance that our completed electrical system will perform as expected. For the most part, the homebuilt electrical systems I've been privileged to examine were surprisingly simple and quite functional. That is, the use of diodes, capacitors, transistors, relays and the like were the exception rather than the rule.

These elementary circuits, as installed in the homebuilts, appear to be as reliable as some of the more complex systems found in production aircraft. Of course, the average homebuilt electrical system is seldom subjected to the same sustained frequency of use, or under as large a variety of severe environmental conditions. Conceding those differences, I can still conclude that the average homebuilt does not suffer any greater malfunction frequency than do aircraft equipped with more sophisticated production-line circuitry.

Still, as serious homebuilders, we want the best possible installation for our aircraft without sacrificing safety (and simplicity, economy, redundancy, luxury, etc.). Because of these conflicting inherent needs, we appear to be constantly looking for new ideas to try out for ourselves. In many instances these "new ideas" are not new at all but are merely new to us because they have not been a part of our own inventory of knowledge or experience.

Finding new information and, perhaps, implementing some of the new techniques and ideas is now more important than ever before . . . simply because the aircraft we fly and the aircraft we build are becoming more and more complex. Although some of that complexity can be blamed on ever increasing governmental requirements, a lot of it is our own doing.

Along the way, we seem to acquire an insatiable craving for equipping our homebuilts with avionics (lots of avionics) - IFR instrumentation, a Loran C, warning and advisory . . . or so called "idiot" lights, instrument panel lighting with complete dimming controls, electric flaps and electric trim, an intercom, a tape deck . . . and on and on.

If my conclusion is accurate, you, too, might be receptive to adapting one or two of the following wiring practices for your own use.

An Avionics Power Switch

Long before builders began to outfit their homebuilts with radios, the ultimate goof was to forget to turn off the master switch. The consequence, of course, was a dead battery the next time you went out to the airplane. But now that avionic equipment is finding a place in most homebuilts, you also have to worry about turning off your radio(s), transponder, Loran C and whatever . . . lest harmful transient voltages damage the semi-conductors in these expensive gadgets while cranking and starting the engine.

Because all of us are forgetful at times, it is a good idea to have a way to drop out power to the avionics equipment during starter cranking. Your car radio has that sort of protection so why not your airplane radio which probably cost many times more?

One way you can provide this protection, automatically, is by installing a normally closed (NC) relay between your main bus and the avionics bus, and connecting it to the starter switch. In such installations, both the main bus and the avionics bus are ON all the time the master switch is ON except during the brief interval the starter switch is activated. At that moment, the NC relay is automatically activated and opens the

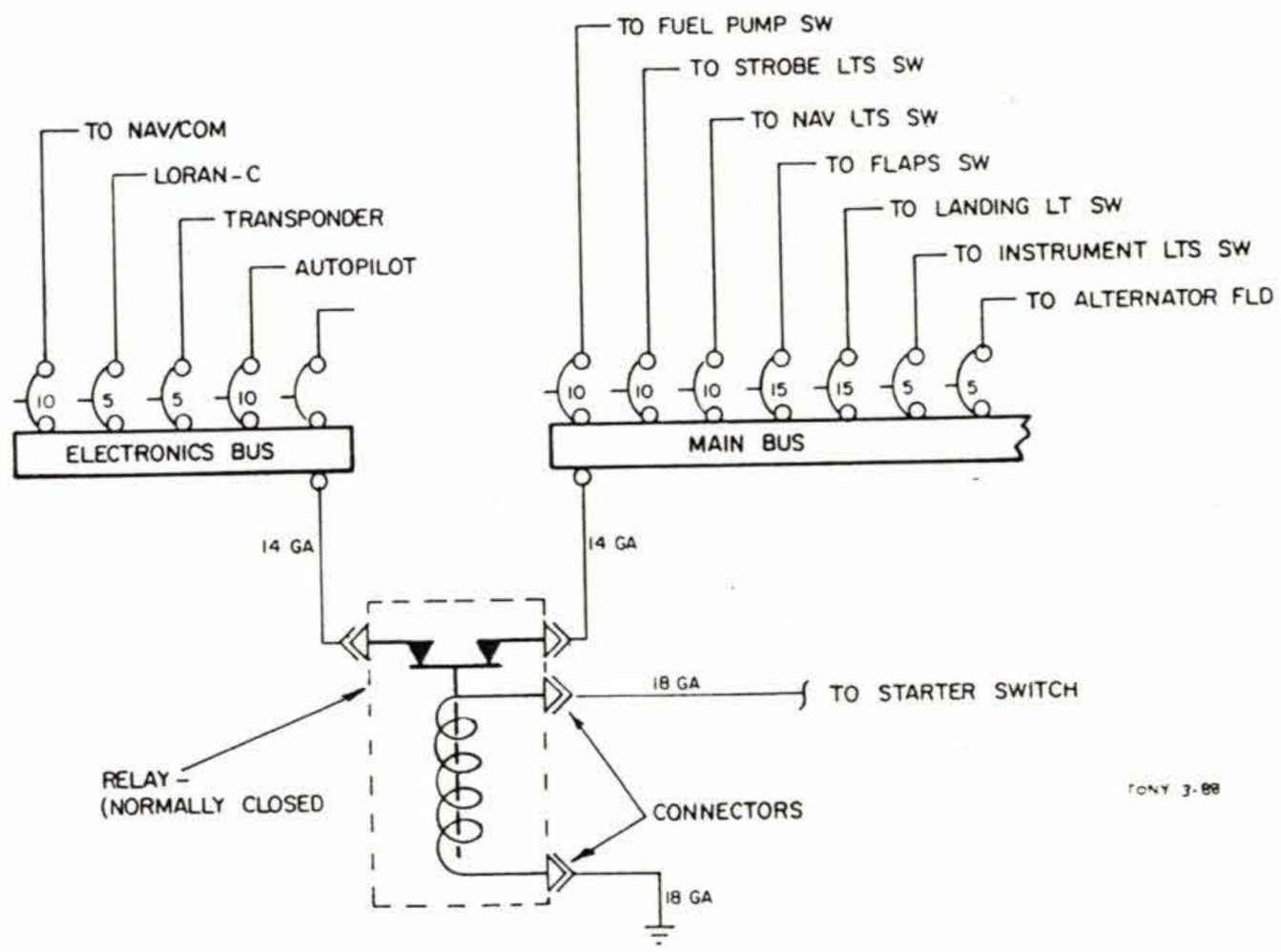

FIGURE 1.

SPLIT BUS DETAIL
(TYPICAL)

CURRENT CARRYING CAPACITY/CIRCUIT PROTECTION (COPPER CABLE)				
CABLE SIZE A/N GAUGE	SINGLE CABLE MAX. AMPS.	MAX. RESISTANCE OHMS/1,000	CIRCUIT BREAKER (AMP)	FUSE (AMP)
22	06	N/A	5.0	5.0
20	11	1.025	7.5	5.0
18	16	.644	10.0	10.0
16	22	.476	15.0	10.0
14	32	.299	20.0	15.0
12	41	.188	25-30	20.0
10	55	.110	35-40	30.0
Source: CAM 18/U.S. Dept. of Commerce				

TABLE I.

circuit to the avionics bus. This isolates the electronic circuits for as long as the starter switch is being used and, thus, prevents transient voltages from damaging the electronics equipment circuits (see Figure 1).

However, these relays are expensive, relatively heavy and cannot, ordinarily, be purchased from your usual homebuilt supply sources. Furthermore, adding a relay for the job merely adds one more electrical unit that is perfectly capable of malfunctioning when you need it most, or failing completely. It is just another potential trouble source.

A simpler, more practical method for protecting the avionics system from transient voltages and voltage drops that occur when the starter is used is with a panel mounted, manually operated toggle switch. Flip this switch and you can drop all of the avionics circuits off the main bus (see Figure 2).

Wire this avionics power switch so that it is ON in the up position where it connects all the avionics equipment electrically to the main bus. You might even wire in an ON advisory light (blue is nice) to provide a visual reminder that the avionics circuit is active.

Remember, when you turn your avionics power switch OFF, no electrical power will get to the avionics equipment regardless of the position of the aircraft's master switch or the individual radio switches.

How About An Emergency Avionics Power Source

Here is an interesting possibility. Anyone who does a lot of serious cross-country flying might like to add an emergency avionics standby power source in the event of an inflight alternator or electrical failure.This standby power should be capable of operating one radio for short intervals when needed. For example, why couldn't you install a 3 position toggle switch (instead of a simple ON/OFF toggle switch) for the avionics power switch?

1. Wire it so the center position is OFF (open), and no radios work.
2. The up position would be ON, with all avionics running on the aircraft electrical system as it always does.
3. Here's the change. The third (down) position should be wired so as to connect that terminal to a small, lightweight battery pack made up of 8 size AA cells or a similar independent power source. This position should also have a small metal guard to prevent inadvertently moving the switch into that position.

NOTE: Globe Battery Division, Milwaukee, WI manufactures at least two types of small, lightweight, 12 volt Gel/Cel batteries that might be suitable for a standby power source, GC 1215 (1.5 lbs.) and GC 1245 (4.5 lbs.).

In most everyday operations, the third (emergency power) position is not, normally, used at all. However, in the event of an electrical power out emergency during flight, the guard over the down position can be bent out of the way, all radios except one turned off and the toggle switch flipped down. You should then be able to use that one radio briefly for the remainder of the flight because the AA cells should be able to power a modern solid state receiver for quite awhile. Admittedly, the transmitter requires more current but is less necessary and even if garbled it might be sufficient for close to the tower communications. Anyway, this could make an interesting project for the guy who already has everything.

What Size Circuit Breaker Or Fuse To Use

The text book answer, of course, is that the circuit breaker protects the wire and not the accessory. However, consider the following.

A chain will break at its weakest link. The others may be stressed, but the weakest will fail. Electrical circuits are similar in this respect. That is, the intended purpose of the circuit breaker (or fuse) is to be that weakest "link" in the circuit. A wire can get hot, but it is the circuit breaker that must fail first (open the circuit) and save that wire

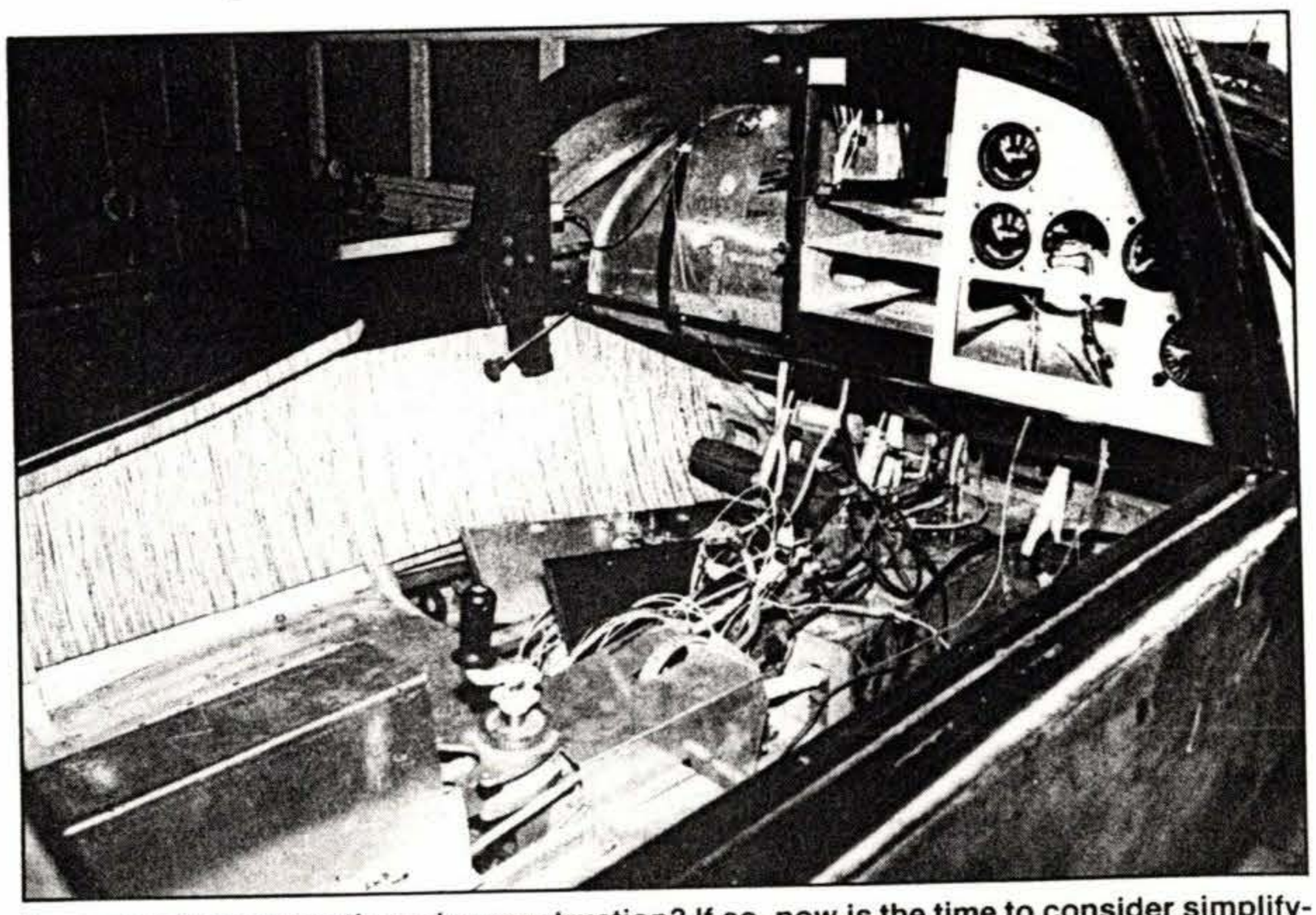

Is your project currently under construction? If so, now is the time to consider simplifying your behind-the-panel wiring by installing combination switch/circuit breakers instead of separate groups of switches and circuit breakers.

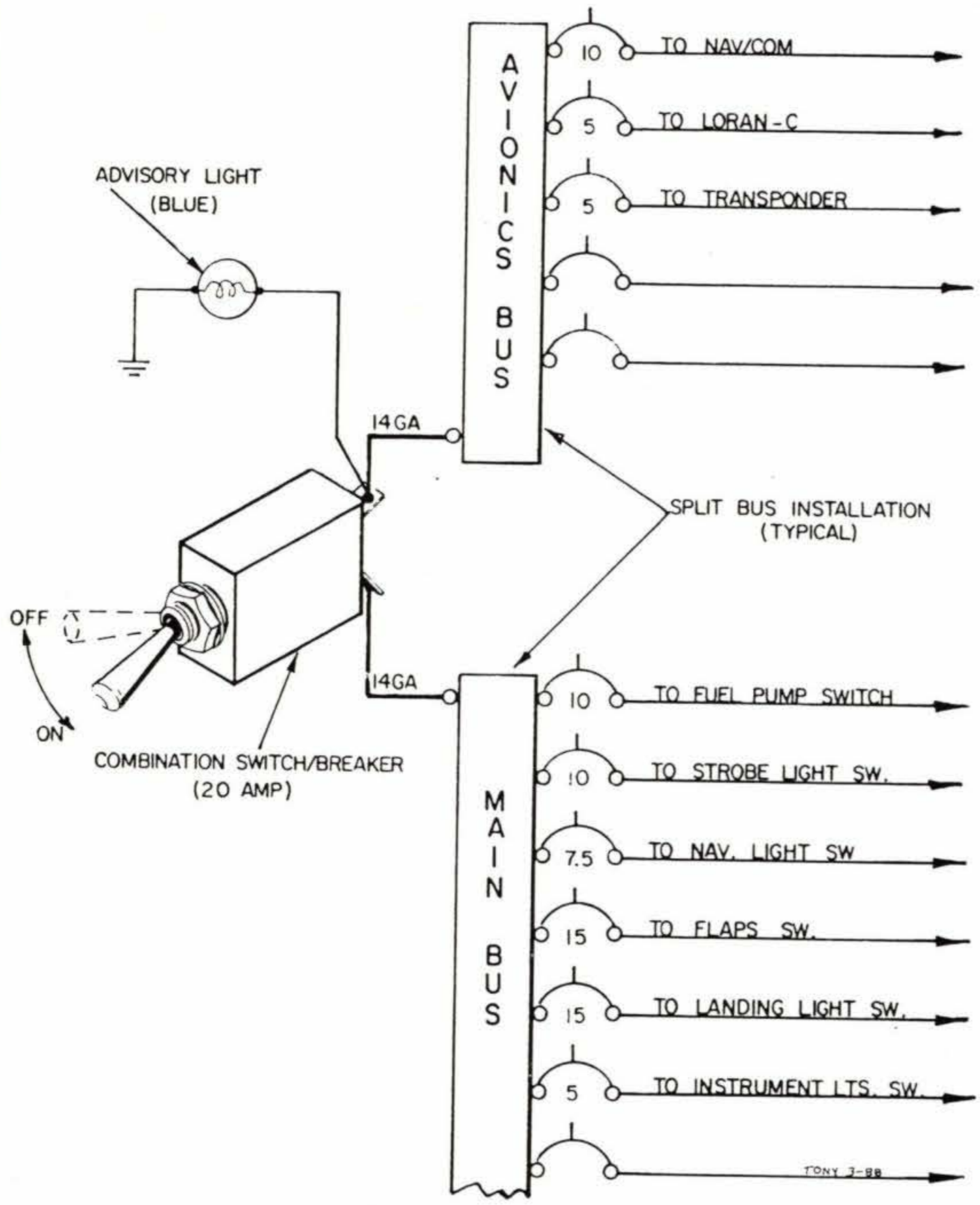

FIGURE 2.
AVIONICS POWER SWITCH
(SCHEMATIC)

from burning.

Take a simple circuit composed, for instance, of a landing light, a switch for it and a circuit breaker. If, for whatever reason, the current could begin to increase from zero to infinity, the item that should fail (open up) first is the circuit breaker. When it does, the current of course ceases and it becomes academic how strong the other "links" are. If the light is connected by a large No. 8 or No. 4 wire, the wire could not have been the weakest link.

Changing wire size certainly changes current carrying capacity, but doesn't the landing light itself determine current flow? Therefore, if somewhat more current is flowing than the bulb needs, it must be due to some fault (trouble) calling for circuit breaker action.

Perhaps the lamp draws 5 amps at 12 volts and we use a switch rated at 7 amps. This is scarcely adequate since bulbs will, when first turned on, draw cold surge current several times their hot demand . . . and this is not an uncommon situation with motors, either. So, how much circuit breaker should we use. 10 amps? 15? No, the rating of the circuit breaker should be sufficient to protect the switch, the next weakest link. Why? Well, if the switch is the weakest link, then it can be sitting there in the panel cooking away, preparing to melt wires nearby or do other mischief while the circuit breaker just sits and does "nuthin". Note that this has little or no relation to wire size.

Of course, if a tiny wire is, in fact, the weakest link, it should not remain so . . . the breaker must be down-sized to overcome that. Think about it. (See Table 1)

Combination Switch/Circuit Breaker Use

The combination switch/circuit breaker is a toggle switch with a built-in circuit breaker that offers the potential for circuit simplification.

A typical instrument panel installation features a row of switches on one side of the panel, and a row of circuit breakers on the other (see Figure 3). If on the other hand you were to install combination switch/circuit breakers instead, you could eliminate the entire bank of switches, their terminal connectors and wires thereto. That would simplify your wiring considerably and save valuable instrument panel space, too, wouldn't it?

As you know, in an ordinary circuit breaker, the button pops out (trips), due to an overload or some fault in the circuit, and you can (after allowing a couple of minutes for cooling), try to restore power by pushing in the reset button. However, most of us know that, in the event the breaker again pops, no attempt should be made to reset it a second time because you probably have a short circuit and a potential fire hazard on your hands.

The operation of a combination switch/circuit breaker is similar except that, instead of a button popping out, the toggle switch flips to the OFF position. Otherwise, the same operational recovery procedure is used with the combination toggle switch/circuit breakers with one difference. If a dangerous overload condition continues to exist, its unique trip-free safety feature permits the breaker contacts to open even when the pilot stubbornly (make that stupidly) holds the toggle switch portion in the reset (ON) position. In addition, its inherent thermal-time-lag design just about eliminates annoying trip-outs occasionally caused by harmless transient overloads.

The combination toggle switch/circuit breaker described is the Model 112 manufactured by Potter and Brumfield and is readily available from most of our homebuilt supply sources in the amperage ratings we most frequently use (5A, 7.5A, 10A, 15A, etc.). These breaker switches are somewhat heavier and a bit more expensive than either a simple toggle switch, or an ordinary circuit breaker (or fuse). However, when you consider that you are getting in a single unit both a toggle switch and a circuit breaker that can be manually opened, the slight cost difference becomes insignificant.

If your project is not yet wired, remember that your wiring complexity can be cut in half by installing combination switch/breakers instead of going with the conventional installation.

The 12 Volt System Vs. The 24 Volt System

What are the basics involved? First, let's understand that 14 volt electrical

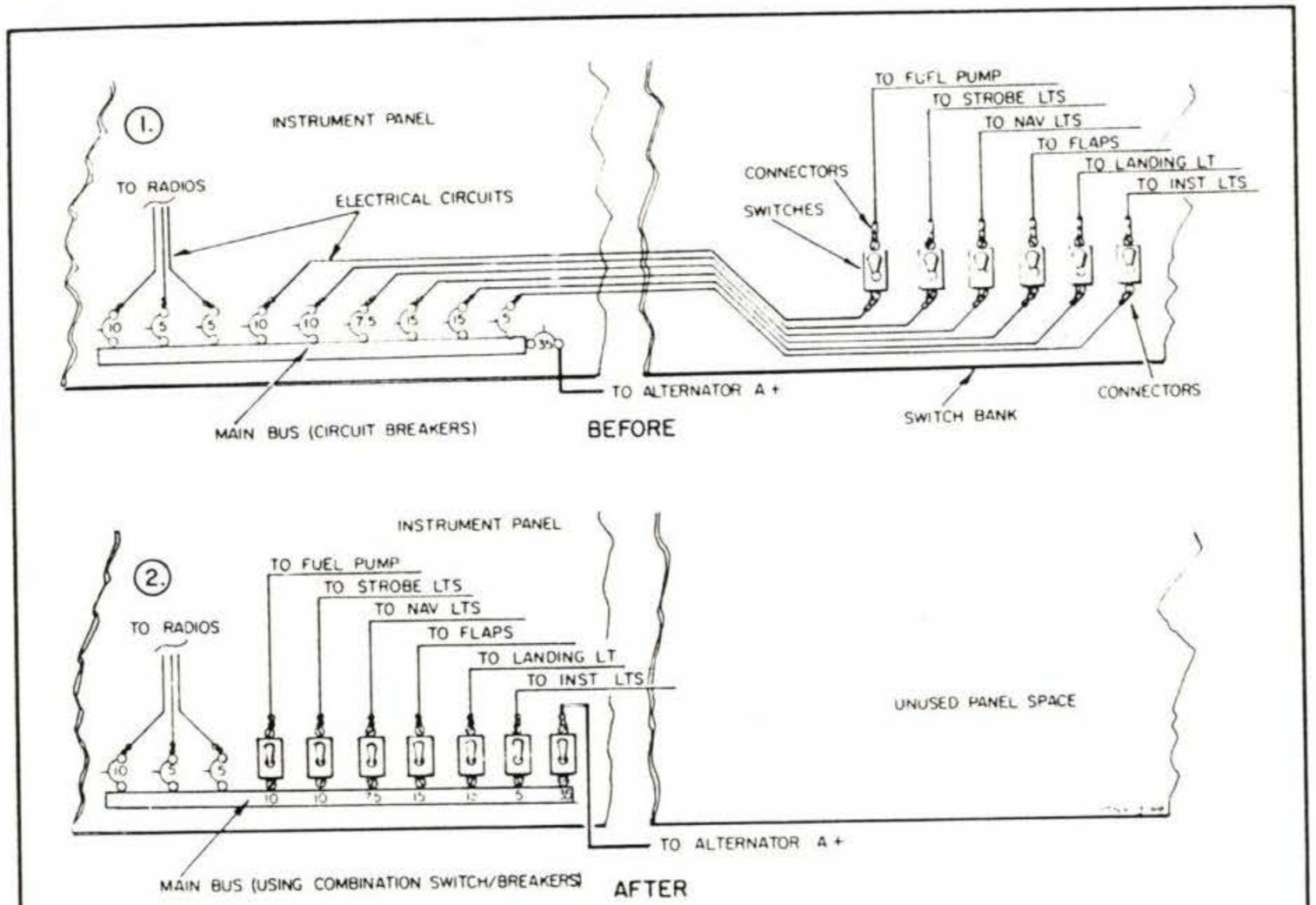

FIGURE 3.

WIRING SIMPLIFICATION

systems use 12 volt batteries and 28 volt systems use 24 volt batteries. Therefore, for all practical purposes, in polite conversations, the terms "12 volt system" and "14 volt system" are used interchangably. The same relationship goes for references to 24 volt and 28 volt systems.

A 24 volt battery will cost about twice as much as a 12 volt battery and it is heavier.

On the other hand, the 12 volt system will require heavier wiring than that needed by a 24 volt system. We can express this relationship another way. The higher the voltage, the lower the current need for the same power. Therefore, you can use a smaller wire without getting an unacceptable voltage drop from the wire's resistance. (The lighter gauge wiring promised by 28 volt systems rarely happens in real life - even in production aircraft.)

I guess the reason most switches and electrical units are rated at 28 volts is because the military specifications are written that way. The ratings will not change much at the lower voltage (14 volts), but, of course, the accessories operated (lights, motors, etc.) will draw twice as much at the lower voltage. Naturally, somewhat heftier switches (higher amp. ratings) will be required to carry the current when used in 12 volt systems.

Lest you are entertaining the idea of trying to adapt both the 14 volt and 28 volt equipment for use in the same aircraft - don't! Thanks to the small amount of wiring required in the small homebuilts, most homebuilders are perfectly happy with their 12 volt systems for which a more plentiful supply of reasonably priced parts and equipment is available.

Technical advisors for this month were Art Bianconi, Plainfield, NJ and Darryl Phillips, Heavener, OK.

If you wish to contact the author for additional information, please write to Tony Bingelis, 8509 Greenflint Lane, Austin, TX 78759.