#42A
8/1/90

# Cleveland
Wheels & Brakes

# Friction Components

## For Cessna Single Engine Aircraft.

**CLEVELAND — the option to choose.**

CLEVELAND is proud to offer a complete line of replacement discs and linings for Cessna/McCauley wheels and brakes.

CLEVELAND FRICTION COMPONENTS, FAA-PMA approved, are now available throughout Cleveland's worldwide distributor/dealer network.

CLEVELAND—the first name in Aircraft Wheels and Brakes is the name to count on for quality, performance and the world's best service.

Contact your dealer or distributor today. They'll be happy to give you all the reasons why Cleveland wheel and brake products are the professional mechanic's choice.

| Cessna Aircraft Model | Cessna/ McCauley Wheel Assembly | Cessna/ McCauley Brake Disc Assembly | Cleveland Brake Disc Assembly |
|---|---|---|---|
| 150, 150A | C163004-0104 | B-30440 | 164-09200 |
| | C163003-0101 or C163003-0102 | B-30195 | 164-09300 |
| | C163002-0101 | B-30007 | 164-09400 |
| 152, A152, F152, FA152 | C163005-0101 or C163006-0101 | C30615-1 | 164-08800 |
| 172, F172, R172, FR172 | C163004-0104 | B-30440 | 164-09200 |
| | C163003-0101 or C163003-0102 or C163004-0104 | B-30195 | 164-09300 |
| | C163002-0101 | B-30007 | 164-09400 |
| 172, F172, 172RG | C163006-0101 | C30615-1 | 164-08800 |
| 177 | C163005-0101 | C30615-1 | 164-08800 |
| 177RG | C163005-0101 or C163006-0101 | C30615-1 | 164-08800 |
| 180, 185 | C163004-0103 | C-30414 | 164-09500 |
| | C163004-0101 | C-30388 | 164-09700 |
| | C163006-0103 Std. | C30615-3 | 164-09000 |
| | C163006-0102 HD | C30615-2 | 164-08900 |
| 182, F182 | C163006-0101 or | C30615-1 | 164-08800 |
| | C163006-0103 | C30615-3 | 164-09000 |
| R182, FR182, TR182 | C163006-0103 | C30615-3 | 164-09000 |
| U206, TU206 | C163004-0102 | C-30398 | 164-09600 |
| | C163004-0101 | C-30388 | 164-09700 |
| | C163006-0103 Std. | C30615-3 | 164-09000 |
| | C163006-0102 HD | C30615-2 | 164-08900 |
| 210, T210, P210 | C163006-0103 | C-30398 | 164-09600 |
| | C163006-0103 | C30615-3 | 164-09000 |

Parker Hannifin Corporation
Aircraft Wheel & Brake Division
1160 Center Road
Avon, Ohio 44011 USA
(216) 934-5221 871-6424

Parker
General Aviation

**Cleveland**
Wheels & Brakes

# Back Plate Bolt Torque Chart

The bolt torques shown in this chart are the recommended values to properly attach the back plate to the brake cylinder. Overtorquing (exceeding these values) could cause depressions in the brake cylinder, which result in dragging or bound up brakes. Use a torque wrench when installing back plate bolts to insure the proper torquing values are attained. Replace the back plate bolts with approved bolts as shown in the Cleveland Parts Catalogue. Depressions in the brake cylinder (surface A) exceeding .005 inch deep requires replacement of the brake cylinder.

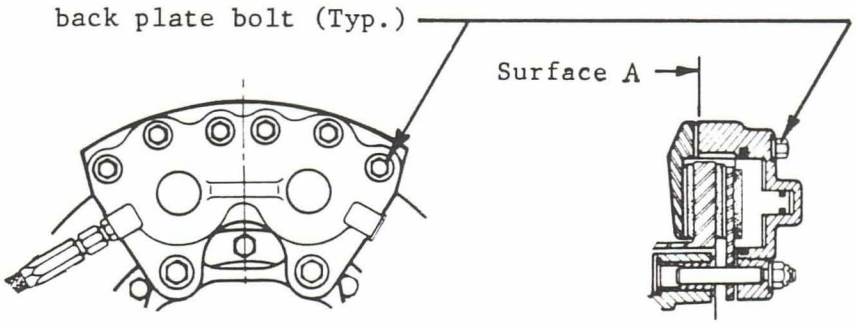


| BRAKE ASSY. | BOLT TORQUE (IN-LB) | BRAKE ASSY. | BOLT TORQUE (IN-LB) | BRAKE ASSY. | BOLT TORQUE (IN-LB) |
|---|---|---|---|---|---|
| 30-1 | 60 | 30-28B | 80-90 | 30-52B | 90 |
| 30-2 | Shoe Type | 30-28C | 80-90 | 30-52D | 90 |
| 30-3 | Shoe Type | 30-28D | 80-90 | 30-52E | 90 |
| 30-3A | Shoe Type | 30-30 | 90 | 30-52F | 90 |
| 30-4 | 60 | 30-31 | 85-90 | 30-52G | 90 |
| 30-5 | 60 | 30-32 | 65-75 | 30-52H | 90 |
| 30-6 | 60 | 30-32A | 65-75 | 30-52J | 90 |
| 30-7 | 60 | 30-32B | 90 | 30-52K | 90 |
| 30-8 | 65-75 | 30-32C | 65-75 | 30-52L | 75-80 |
| 30-9 | 60 | 30-32D | 90 | 30-52M | 90 |
| 30-9A | 60 | 30-34 | 60 | 30-52N | 90 |
| 30-9B | 60 | 30-35 | 65-75 | 30-52P | 90 |
| 30-12 | 65-75 | 30-40 | 60 | 30-52Q | 90 |
| 30-13 | 65-75 | 30-40A | 75-80 | 30-52S | 90 |
| 30-18 | 60 | 30-41 | 65-75 | 30-52T | 90 |
| 30-19 | 75-80 | 30-41A | 90 | 30-52U | 90 |
| 30-19A | 75-80 | 30-41B | 65-75 | 30-52V | 90 |
| 30-21 | 65-75 | 30-45 | 60 | 30-52W | 90 |
| 30-23 | 65-75 | 30-51 | 65-75 | 30-53 | 75-80 |
| 30-23A | 65-75 | 30-51A | 65-75 | 30-53A | 75-80 |
| 30-23B | 65-75 | 30-51B | 65-75 | 30-54 | 90 |
| 30-23C | 65-75 | 30-52 | 90 | 30-54A | 90 |
| 30-24 | 65-75 | 30-52A | 90 | 30-54B | 90 |

Parker Hannifin Corporation
Aircraft Wheel & Brake Division
1160 Center Road
Avon, Ohio 44011 USA
(216) 934-5221, 871-6424

Parker
General Aviation

**Cleveland**
Wheels & Brakes

Parker Hannifin Corporation
**Aircraft Wheel & Brake Division**
1160 Center Road
Avon, Ohio 44011 USA
(216) 934-5221, 871-6424

# Friction Components Brake Disc Applications

## FAA-PMA

**Type Certificated Aircraft Eligible for Installation of Cleveland Brake Parts**

| Cleveland P/N | Aircraft Mfg. | Model | Wheel Assy. | Disc. Mfg. P/N |
|---|---|---|---|---|
| 164-08800 | Cessna | 152, A152<br>F152, FA152 | C163005-0101 or<br>C163006-0101 | C30615-1 or<br>C30615-4 |
| | | 172, F172, 172RG | C163006-0101 | C30615-1 |
| | | 177 | C163005-0101 | |
| | | 177RG | C163005-0101 or<br>C163006-0101 | |
| | | 182, F182 | C163006-0101 | |
| 164-08900 | Cessna | 180, 185 | C163006-0102 H-D | C30615-2 |
| | | U206, TU206 | C163006-0102 H-D | |
| 164-09000 | Cessna | 182, F182 | C163006-0103 | C30615-3 |
| | | R182, FR182, TR182 | C163006-0103 | |
| | | 180, 185 | C163006-0103 Std | |
| | | U206, TU206 | C163006-0103 Std | |
| | | 210, T210, P210 | C163006-0103 | |
| 164-09200 | Cessna | 150, 150A | C163004-0104 | B-30440 |
| | | 172, F172, R172, FR172 | C163004-0104 | |
| 164-09300 | Cessna | 150, 150A | C163003-0101 or<br>C163003-0102 | B-30195 |
| | | 172, F172,<br>R172, FR172 | C163003-0101 or<br>C163003-0102 or<br>C163004-0104 | |
| 164-09400 | Cessna | 150, 150A | C163002-0101 | B-30007 |
| | | 172, F172, R172, FR172 | C163002-0101 | |
| 164-09500 | Cessna | 180, 185 | C163004-0103 | C-30414 |
| 164-09600 | Cessna | U206, TU206 | C163004-0102 | C-30398 |
| | | 210, T210, P210 | C163006-0103 | |
| 164-09700 | Cessna | 180, 185 | C163004-0101 | C-30388 |
| | | U206, TU206 | C163004-0101 | |

The above applications are also available with chrome plating. Parts numbers are:

| Chrome | Standard |
|---|---|
| 164-18800 | 164-88 |
| 164-18900 | 164-89 |
| 164-19000 | 164-90 |
| 164-19200 | 164-92 |
| 164-19300 | 164-93 |
| 164-19400 | 164-94 |
| 164-19500 | 164-95 |
| 164-19600 | 164-96 |
| 164-19700 | 164-97 |

**Cleveland**
Wheels & Brakes

Parker Hannifin Corporation
**Aircraft Wheel & Brake Division**
1160 Center Road
Avon, Ohio 44011 USA
(216) 934-5221, 871-6424

# Friction Components Brake Lining Applications
## FAA-PMA

**Type Certificated Aircraft Eligible for Installation of Cleveland Brake Parts**

| Cleveland P/N | Aircraft Mfg. | Model | Series or S/N | Acft. Mfg. P/N | Airborne P/N |
|---|---|---|---|---|---|
| 066-08700 (Lining) | Cessna | 150 F.G.H.J.K | 150-72004 and up | B-30026 | 487 |
| .. | .. | 150 Aerobat | A-150-0227 and up | .. | .. |
| .. | .. | F150 Aerobat | FA-150-0082 and up | .. | .. |
| .. | .. | 172 and Skyhawk | 172-60835 and up | | .. |
| .. | .. | 177, Cardinal and Cardinal RG | 177-02314 and up | | .. |
| .. | .. | 180 | 180-52385 and up | .. | .. |
| .. | .. | 182 and Skylane | 182-55846 and up | .. | .. |
| .. | .. | 185 | 185-02311 and up | .. | .. |
| .. | .. | 206, U206, P206 Super Skylane, Super Skywagon | 206-02200 and up | .. | .. |
| .. | .. | 210 & Centurion | 210-60090 and up | .. | .. |
| 105-00700 (Rivet) | Cessna | All above | See above | A-30087 | 495 |

| | | | | | |
|---|---|---|---|---|---|
| .796 ±.030 | 1.31 | .462 | REQUIRED | REQUIRED | REQUIRED |

## BRAKE RATING

| BRAKE | KINETIC ENERGY CAPACITY |
|---|---|
| 30-9 | 117,500 FT. LBS. |
| 30-9A | 117,500 FT. LBS. |
| 30-59A | 185,000 FT. LBS. |
| 30-75X | 200,000 FT. LBS. |
| 30-136 | 45,090 FT. LBS. |

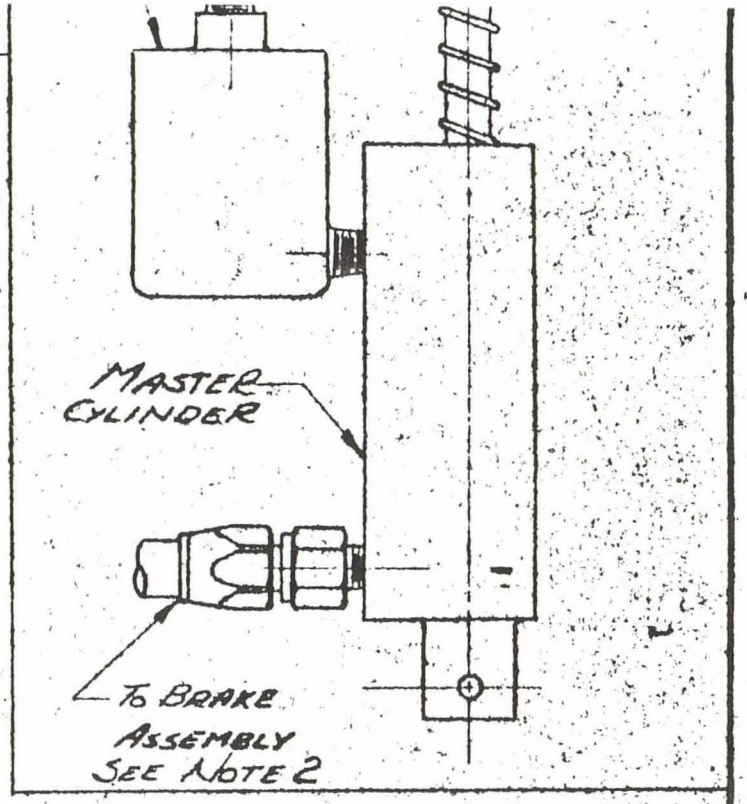


THIS DESIGN IS THE PROPERTY OF PARKER-HANNIFIN CORP. VANSICKLE DIVISION AND IS NOT TO BE COPIED, DUPLICATED OR USED AS THE BASIS FOR MANUFACTURE OR SALE OF EQUIPMENT WITHOUT OUR WRITTEN PERMISSION.

REFERENCE PRINT ONLY
PARKER HANNIFIN CORP.
ENG OCT 11 1984 DEPT.
AVON, OHIO
DO NOT USE FOR PRODUCTION

| QTY | QTY | ITEM | PART NO. | DESCRIPTION | MATERIAL & SPEC. | HEAT TREAT & SPEC. | FINISH & SPEC. | WGT. |
|---|---|---|---|---|---|---|---|---|
| | | | 050-07600 | INSTALLATION | | | | |

| NEXT ASSEMBLY | QTY | FINAL ASSEMBLY | QTY | PATTERN, CASTING OR BLANK NO. | DRAWN BY | Cleveland Wheels & Brakes |
|---|---|---|---|---|---|---|
| | | | | | CHECKED BY | Aircraft Wheel and Brake Division, Parker Hannifin Corporation, 1160 Center Road, Avon, Ohio 44011 |
| | | | | | SCALE NONE | |
| | | | | | NAME INSTALLATION | 050-07600 |

THIS DESIGN IS THE PROPERTY OF PARKER HANNIFIN CORP. AIRCRAFT WHEEL AND BRAKE DIVISION AND IS NOT TO BE COPIED, DUPLICATED, OR USED AS THE BASIS FOR MANUFACTURE OR SALE OF EQUIPMENT WITHOUT OUR WRITTEN PERMISSION.

ZYGLO PER MIL-I 6866 STAMP M ON PART

MAGNAFLUX PER MIL-I-6868 STAMP P ON PART

√ MACHINED SURFACES PER MIL STD 10 UNLESS OTHERWISE NOTED

UNLESS NOTED ALL THREADS PER MIL-S-7742

WORK TO DIMENSIONS — DO NOT SCALE
TOLERANCE FOR .XXX ± .010
TOLERANCE FOR .XX ± .030
TOLERANCE FOR ANGULAR DIMS. ± 1/2°
TOLERANCE FOR FRACTIONAL DIMS. ± .030

BREAK SHARP EDGES .010 UNLESS NOTED. REMOVE ALL BURRS BEFORE PLATING. DRILL PER INSP. PROCEDURE NO. 114.

50-76

| CHANGE NOTICE | LETTER | DESCRIPTION OF CHANGE | CHG. BY | DATE | CHK'D. BY |
|---|---|---|---|---|---|
| 267/78 | - | FIRST RELEASE | RS | 6-15 81 | |
| 268/34 | A | REDRAWN & REVISED | RS | 9-8 81 | |

199-106 KIT

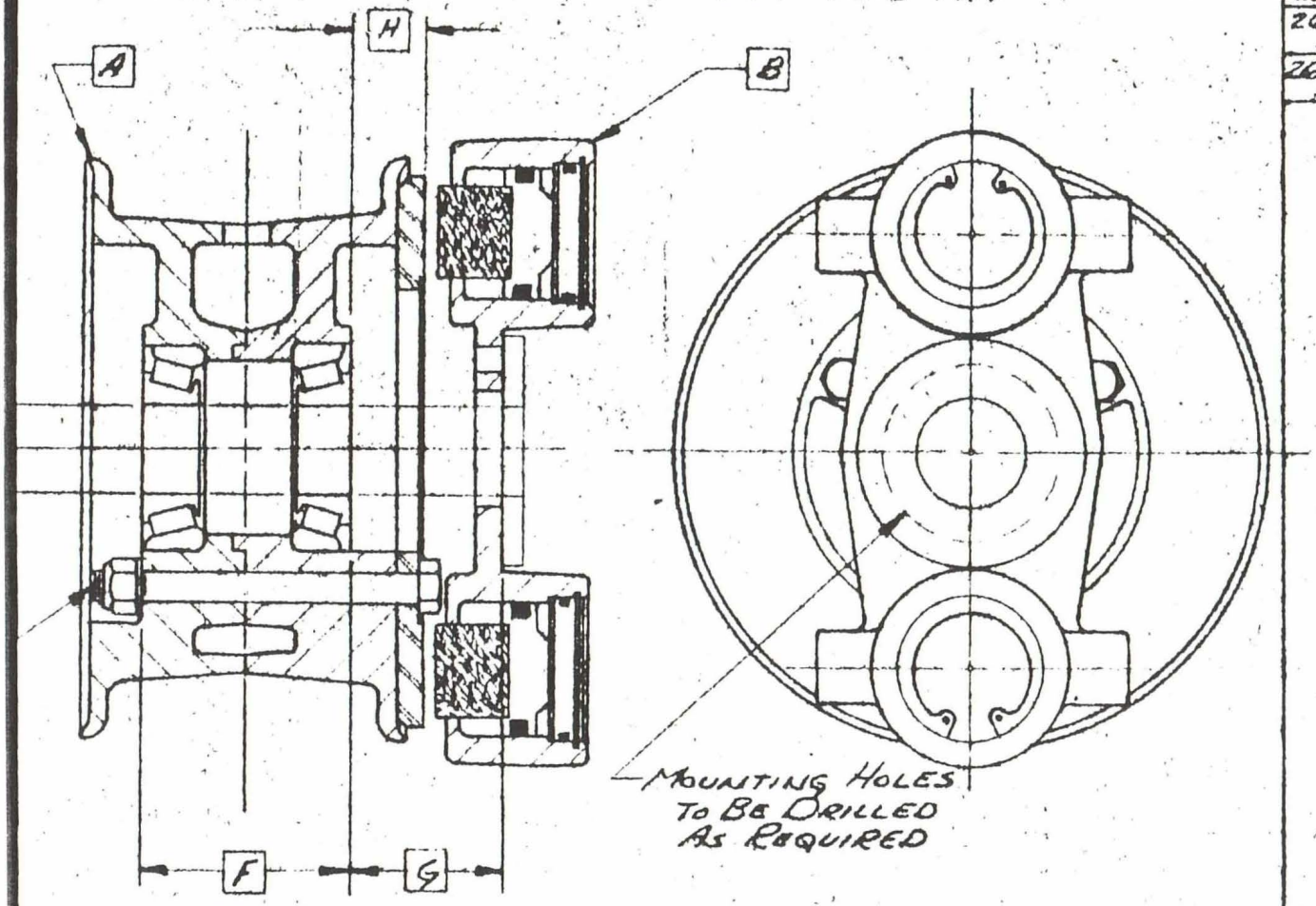


| BEARING SPACING F | AXLE SPACING G | MAX. ROTATING PARTS H | BOLT HOLE LOCATION I | BOLT HOLE LOCATION J | BOLT HOLE DIA. K |
|---|---|---|---|---|---|
| 3.042<br>3.010 | .947 | 1.495 | .537 | .968 | .255-.262 |
| 3.042<br>3.010 | .947 | 1.495 | .537 | .968 | .255-.262 |
| 3.292<br>3.250 | 1.668 | 2.207 | .562 | .974 | .375-.382 |
| 3.292<br>3.250 | 1.668 | 2.216 | .562 | .974 | .375-.382 |

1.

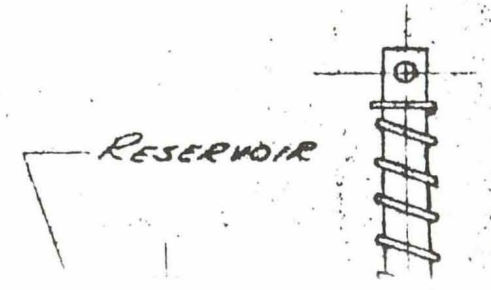


#42
8.20

| | | | | | | |
|---|---|---|---|---|---|---|
| 199-106 | [illegible] + ALUM. WHEEL ALUM. BRAKE | 40-[illegible]0 | 30-136 | 90 IN. LBS. | | .1303 .7500 |

## WHEEL RATING

| WHEEL | STATIC CAPACITY | LIMIT LOAD |
|---|---|---|
| 40-78B | 1260 LBS. | 4550 LBS. |
| 40-78A | 1260 LBS. | 4550 LBS. |
| 40-59A | 1750 LBS. | 6000 LBS. |
| 40-113X | 1500 LBS. | 6000 LBS. |
| 40-160 | 375 LBS. | |

| KIT | WEIGHT |
|---|---|
| 199-102 | 10.80 |
| 199-103 | 12.40 |
| 199-104 | 16.36 |
| 199-105 | 18.50 |
| 199-106 | 7.50 |

NOTES:

1. THE FOLLOWING ITEMS ARE TO BE FITTED PER AIRCRAFT REQUIREMENTS: HOSE ASSEMBLY(S), RESERVOIR AND MASTER CYLINDER.

2. WHEN ROUTING THE HYDRAULIC LINE(S) KEEP THE HIGH POINTS TO A MINIMUM, FOR THEY TRAP AIR AND MAKE BLEEDING THE LINE(S) DIFFICULT.

3. BRAKE CYLINDER TO BE LOCATED ABOVE GROUND LINE.

4. DUST SHIELDS ARE SUPPLIED WITH

DO NOT SCALE

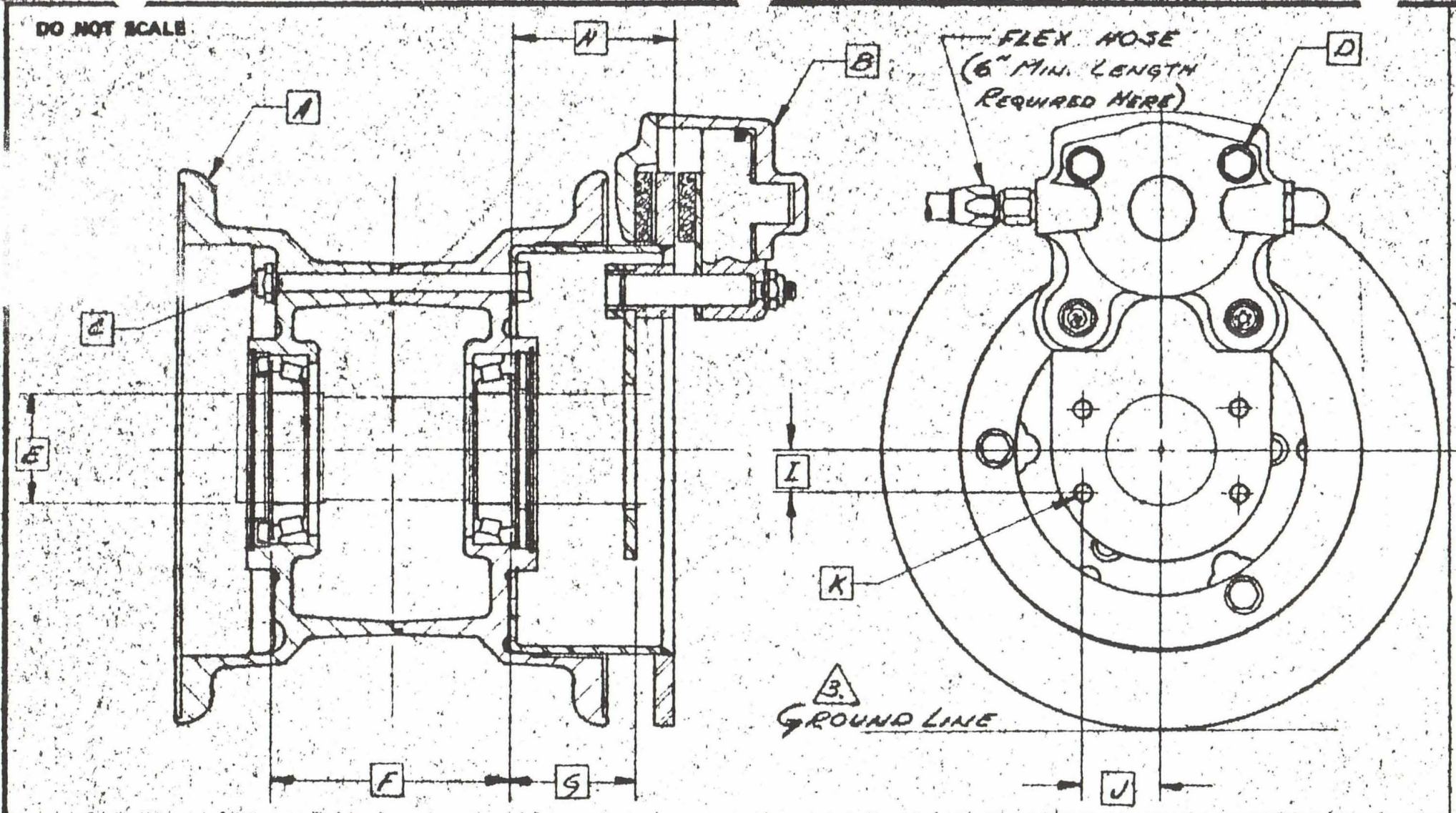


| KIT NUMBER | DESCRIPTION MAGNESIUM = MAG. ALUMINUM = ALUM. | WHEEL ASSEMBLY A | BRAKE ASSEMBLY B | TORQUE WHEEL NUTS C | TORQUE TIE BOLTS D | BEARIN DIA. |
|---|---|---|---|---|---|---|
| 199-102 | 5.00-5 MAG. WHEEL ALUM. BRAKE | 40-78B | 30-9 | 90 IN. LBS. | 90 IN. LBS. | 1.2505 1.2500 |
| 199-103 | 5.00-6 ALUM. WHEEL ALUM. BRAKE | 40-78A | 30-9A | 90 IN. LBS. | 90 IN. LBS. | 1.2505 1.2500 |
| 199-104 | 6.00-6 MAG. WHEEL MAG. BRAKE | 40-59A | 30-59A | 150 IN. LBS. | 90 IN. LBS. | 1.5005 1.5000 |
| 199-105 | 6.00-6 ALUM. WHEEL ALUM. BRAKE | 40-113X | 30-75X | 90 IN. LBS. | 90 IN. LBS. | 1.5005 |

**Cleveland**
Wheels & Brakes

# Brake Disc: Inspection & Service

Under average field conditions a brake disc should give years of trouble-free service. However, unimproved fields, standing water, heavy industrial pollution, or infrequent use of the aircraft, may necessitate more frequent inspection of discs to prolong the life of the brake lining.

Generally the disc faces should be checked for wear (Dim. "A"), grooves, deep scratches, excessive general pitting or coning of the brake disc. Coning beyond .015 in either direction would be cause for replacement. Single or isolated grooves up to .030 deep should not be cause for replacement, although general grooving of the disc faces will reduce lining life.

If a powder rust appears, one or two taxi-braking applications should wipe the disc clear. Rust allowed to progress beyond this point, may require removal of the disc from wheel assembly to properly clean both faces. Wire brushing, followed by sanding with 220 grit sandpaper can restore the braking surfaces for continued use.

For infrequent aircraft use the Cleveland Chrome Discs are recommended for retarding corrosion.

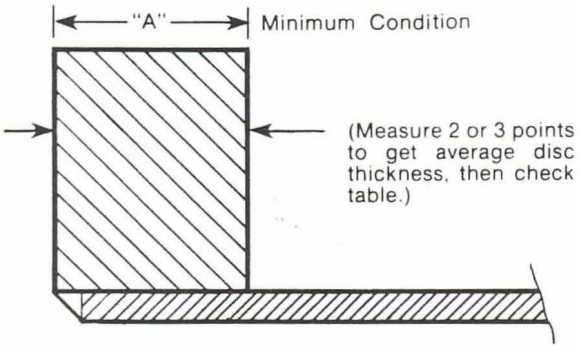


| Part Number | "A" | Wheel Assembly |
|---|---|---|
| 159-1D | .225 | 40-5 |
| 159-2D | .475 | 40-3 |
| 159-7 | .320 | 40-127/30-91 |
| 159-9 | .440 | 40-137/30-103 40-174/30-148 |
| 164-1 | — | Superseded by 164-9 |
| 164-2F | — | Ref PRM 19 |
| 164-3 | .205 | 40-41 |
| 164-4 | .162 | 40-12 40-12A 40-12B 40-19 40-19A 40-19B |
| 164-5 | .157 | 40-28 40-28D 40-57 40-57A |
| 164-7 | .345 | 40-32 40-32A 40-32B 40-37 40-44 40-66 40-67 40-74 40-74B |
| 164-8 | .334 | 40-40A |
| 164-9 | .227 | 40-1 40-16 40-21 40-21A 40-24 40-58 40-71 |
| 164-10 | .345 | 40-34 |
| 164-11 | .345 | 40-47 |
| 164-13 | .227 | 40-61 |
| 164-14 | .334 | 40-40B |
| 164-15A | .327 | 40-75 40-75B 40-75E 40-75F 40-75G 40-75H |
| 164-17 | .167 | 40-78 40-78A 40-78B |
| 164-19 | .227 | 40-84 |
| 164-20 | .205 | 40-86 40-86A 40-86B 40-88 40-88A 40-88B 40-88C |
| 164-22A | .345 | 40-90 40-90B |
| 164-23 | .345 | 40-90A |
| 164-25A | .450 | 40-83 40-96 40-96A 40-96B 40-96E |
| 164-25B | .450 | 40-83A |
| 164-26A | .205 | 40-97 Series |
| 164-27 | .330 | 40-98 40-98D 40-98F |
| 164-27A | .340 | 40-98A 40-98D |
| 164-28 | .227 | 40-99 |
| 164-29 | .580 | 40-126 |
| 164-30 | .282 | 40-101 |
| 164-31 | .163 | 40-101A |
| 164-32F | — | Ref PRM 19 |
| 164-33 | .235 | 40-84A |
| 164-35 | .260 | 40-102 |
| 164-36 | .327 | 40-75D |

*continued on back*

Parker Hannifin Corporation
Aircraft Wheel & Brake Division
1160 Center Road
Avon, Ohio 44011 USA
(216) 934-5221, 871-6424

Parker General Aviation

# INSTALLATION PROCEDURES FOR MODELS:

## P100, P116, P117, P119, J205, J705, P605, W117

## VACUUM AND PRESSURE SWITCHES

WHITMAN™
CONTROLS

201 DOLPHIN RD. • BRISTOL, CT 06010 • 860 583-1847

WEB SITE: WWW.WHITMANCONTROLS.COM
FAX # 860-583-5293

## CAUTION

This instrument must not be subjected to temperatures, pressure or electrical loads exceeding those appearing on the name plate, and specifications in our published literature.

## INSTALLATION AND ASSEMBLY INSTRUCTIONS

Before installing your WCC pressure switch, please become familiar with the general information contained in the literature and Technical Specification Sheet covering the specific switch.

"F" SET
Factory set switches are preset and sealed at the Whitman Control's factory in accordance with specific instructions from the customer. They cannot be readjusted in the field.

"C" SET
Customer set and field adjustable.

"K" SET
Factory set to customer specification. May be adjusted in the field.

### Electrical Connection
If your switch has a standard "T" interface, push-on receptacles may be used as interface between your wires and the terminals. These receptacles are available upon request.

### Soldering
Should you choose to solder the connection, care must be used when soldering the leads to the terminals of these switches, following the recommendations below.

We recommend that a soldering iron with an 1/8" diameter THERMOSTATICALLY controlled tip of 500°F be used and that it not be on the terminal longer than 10 seconds.

Excessive heat and flux can cause serious damage to the switch.
**Pressure Connection** Use a wrench on the hex part of the fitting only. DO NOT TORQUE the switch body.

## PRESSURE SET POINT ADJUSTMENT - JAM NUT

## STYLE ADJUSTING RING MODELS P100, P116, P117, W117, P119, J205, J705 - K OR C SET

The K & C designs are readily adjustable throughout their prescribed range by loosening the adjusting ring, Turning the electrical switch clockwise will lower the set point, turning it counterclockwise will increase the set point. When desired set point is reached, the assembly is locked again by tightening the adjusting ring.

Entire adjustable range may be covered by rotating approximately 250° each side of the mean.

## VACUUM SET POINT ADJUSTMENT - VACUUM MODELS

To lower set point turn electrical switch counterclockwise. To raise set point turn electrical switch clockwise.

## PRESSURE SET POINT ADJUSTMENT - MODEL P605

Slide spring clip cover down past adjusting ring window. Insert .093 inch dia. pin into adjusting ring radial hole. Pushing the pin to the right (counterclockwise) will lower the set point; to the left (clockwise) will raise the set point. When desired set point is reached, remove pin and slide up the cover to close the adjusting ring window.

## PRESSURE SWITCH SET POINT TESTING

For best results when testing for electrical state change:
- Install into final application as superior test method.
- Bench test when final application is not available by using 6 or 12 VDC power supply with 0.5 to 1 watt load.
- Do not use an ohm meter or multimeter, as this method will result in erroneous readings.

# WIRING INSTRUCTIONS - PRESSURE SWITCHES*

MODELS P100, P116, P117, P119, J205, J705, P605, W117

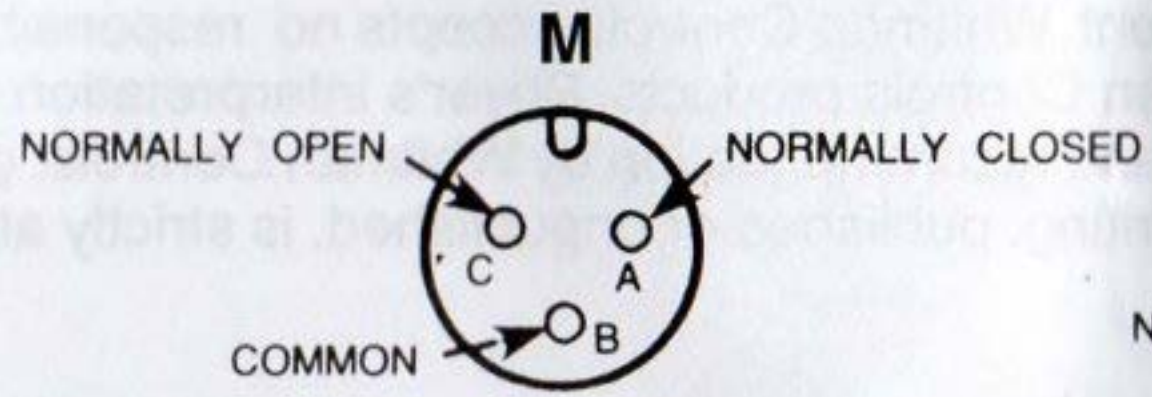


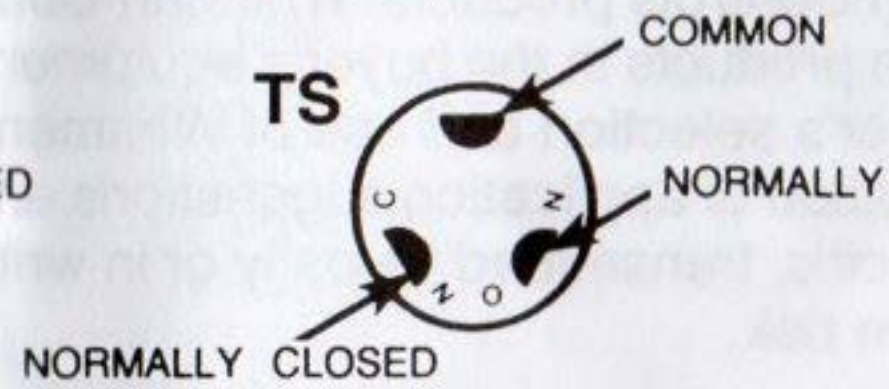


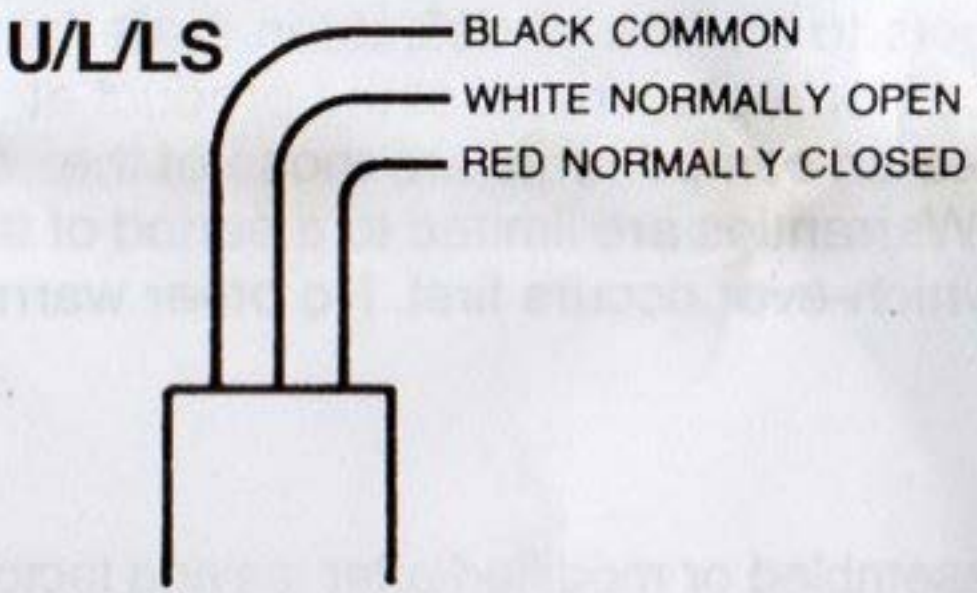


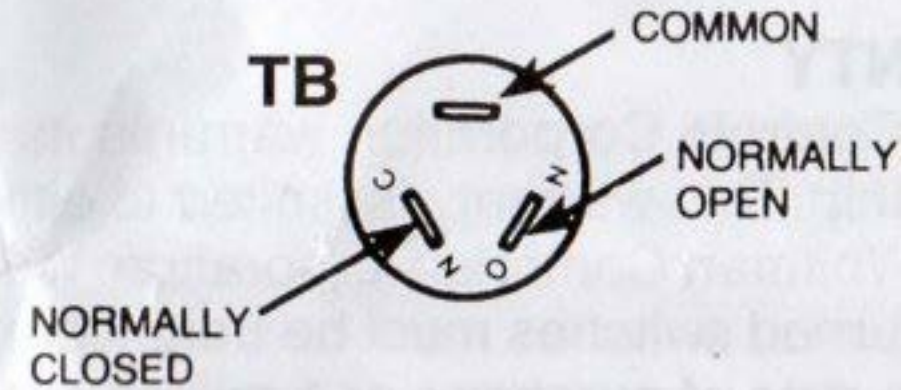


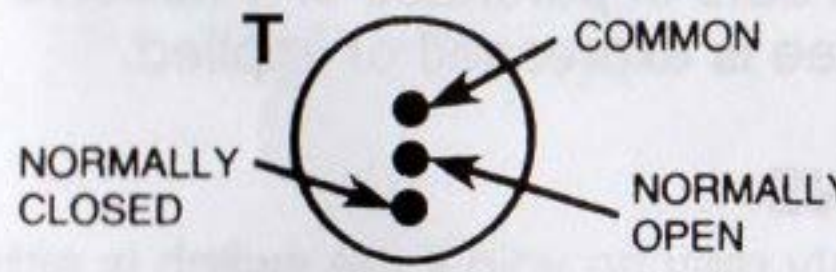


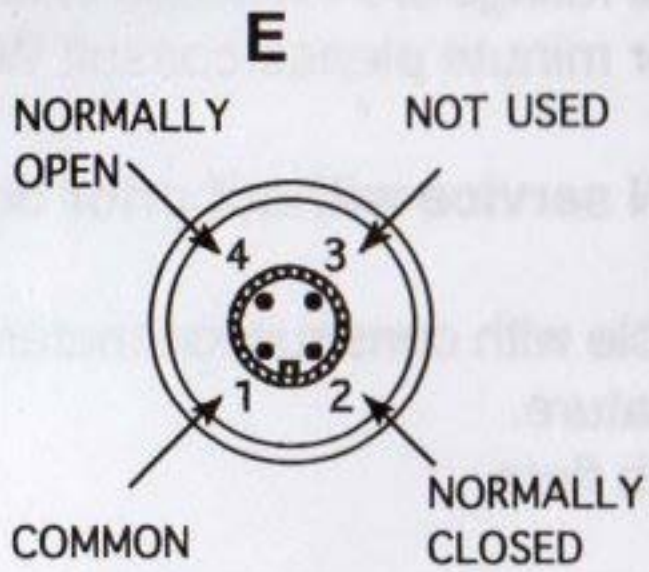


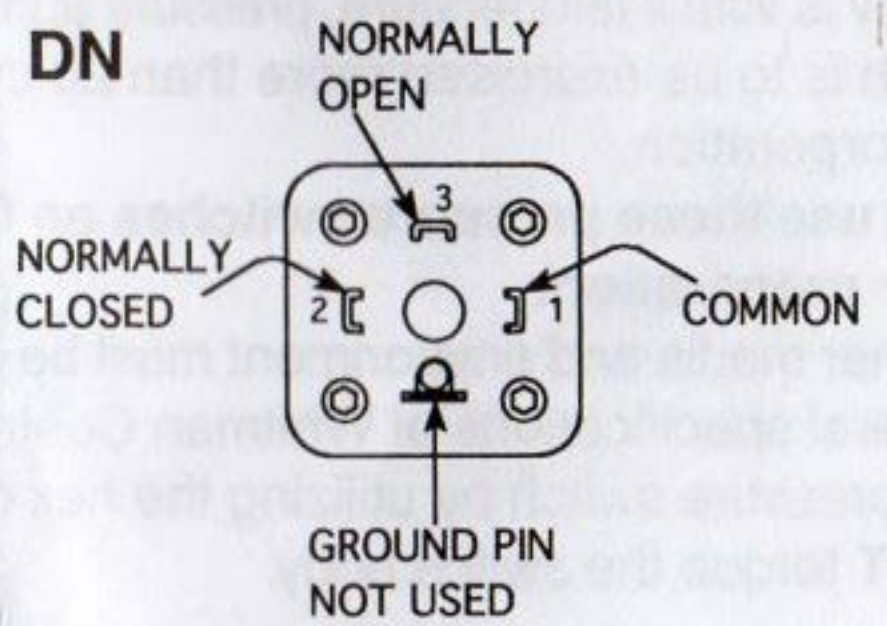


*Vacuum Switches: Normally Open & Normally Closed are reversed

## LIMITATION OF APPLICATION LIABILITY:

Whitman Controls Corporation assumes the buyer to be expert in his intended application of Whitman Controls products. Whitman Controls claims no special expertise in the application of its products in the buyer's equipment. Whitman Controls accepts no responsibility for the buyer's selection and use of Whitman Controls products. Buyer's interpretation and implementation of application suggestions and recommendation by Whitman Controls, general or specific, transmitted verbally or in writing, published or unpublished, is strictly at the buyer's own risk.

## WARRANTY

Whitman Controls Corporation warrants its products to be free of defects in material and workmanship. This warranty is limited to either repair or replacement of the product at the option of Whitman Controls Corporation. Warranties on components are those of the suppliers. Returned switches must be freight prepaid. Warranties are limited to a period of three years from date of purchase or 1 million cycles, which-ever occurs first. No other warranty or guarantee is expressed or implied.

## CAUTIONS

- Warranty may be void if the switch is either disassembled or modified after leaving factory.
- Warranty is void if temperature, pressure and electrical ratings are exceeded in test or in service.
- If switch is to be exercised more than 20 cycles per minute please consult Whitman Controls Corporation.
- **Do not use these pressure switches on OXYGEN service without prior degreasing and proper preparation.**
- Customer media and environment must be compatible with construction materials as outlined in general specifications of Whitman Controls Literature.
- Install pressure switch by utilizing the hex or wrench flats.
  Do **NOT** torque the switch body.

PRINTED IN U.S.A 07/2017